SPRING WASHERS "CONTACT" TOOTHED

ISO	UNI	DIN
-	-	-

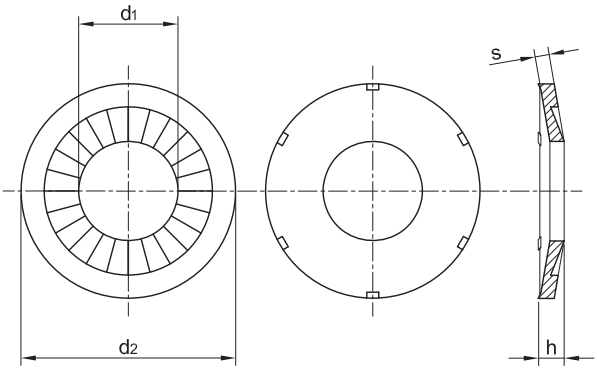

MATERIAL	**SPRING STEEL**
MECHANICAL PROPERTIES	ACCORDING TO **UNI EN 10132-4**
CLASS	**420-510 HV**
TOLLERANCES	ACCORDING TO **DIN 2093**
AVAILABLE TREATMENT	Black - White zinc plated or Yellow zinc plated with dehydrogenation according to RoHS Other coatings on request

NARROW

d	d_1	d_2	s	h max	Teeth N.	Kg
M 3	3,1	6	0,5	0,9	6	0,08
M 4	4,1	8	0,8	1,2	6	0,20
M 5	5,1	10	1	1,5	6	0,41
M 6	6,1	12	1,2	1,8	6	0,71
M 8	8,2	16	1,4	2,4	6	1,50
M 10	10,2	20	1,6	2,6	6	2,68
M 12	12,4	24	1,6	2,6	6	3,85

Weight for 1000 pcs

The weights indicated are approximate. **Other sizes avaible on request.**

THE DATA CONTAINED ARE NOT BINDING. THE COMPANY RESERVES THE RIGHT TO CHANGE THE INFORMATION CONTAINED WITHOUT PRIOR NOTICE. Copyright VIPA s.p.a.